The National Falcon News

THE MUSIC CITY CHAPTER - FCA
INVITES YOU TO OUR SECOND REGIONAL MEET — MEMORIAL DAY WEEKEND — MAY 22-23, 1998

SHOW REGISTRATION FORM

Name_____ Spouse/Guest_____
Last First MI Last First MI

Street/P.O. Box #_____ City_____

State_____ Zip_____ Phone_____

FCA#_____ Chapter Affiliation_____

Entrant releases FCA and Music City Chapter from all liability:_____
Signature

CAR INFORMATION

Year	Color	Body Style	Category**	Class (FCA Use)
_____	_____	_____	_____	
_____	_____	_____	_____	

**Stock Daily Driver Modified Masters Pro??????

After April 1, 1998

Remittance

First Vehicle	$_____($20.)		_____
Additional Vehicle	$_____($15.)		_____
Display/No Vehicle	$_____($15.)		_____
Swap Space(s)	_____	$20. each	$ _____
Regional T-Shirts	Qty. ____ S___M___L___XL___	$10. each	$ _____
Regional T-Shirts	Qty. ____ XXL____ XXXL_____	$12. each	$ _____
Dinner	Qty. ____ _____Adult(s)	$20. each	$ _____
Dinner	Qty. ____ _____Children	$10. each	$ _____
		TOTAL ENCLOSED:	$ _____

Make checks payable to MCCFCA (Music City Chapter FCA)
Mail registration to:
Bob Ferguson
Box 1343, Tullahoma, TN 37388
931-455-6448 (Althea) 615-781-9374

Held at:
Fiddler's Inn North
2410 Music Valley Dr.
615-885-1440

THE FALCON CLUB OF AMERICA — 19th NATIONAL CONVENTION

JULY 16, 17, 18, 1998 — BRECKENRIDGE , COLORADO

NAME_____ SPOUSE/GUEST_____
ST. ADDRESS_____
CITY_____ STATE_____ ZIP_____
PHONE NO. (____)_____ FCA#_____ CHAPTER_____

Note: Please see class descriptions. **Please be accurate and Register Early!!** A DRAWING FOR A $100 ROOM CREDIT AT BEAVER RUN RESORT WILL BE HELD FOR THOSE REGISTERED PRIOR TO JUNE 1, 1998.
REGISTRATION PRIOR TO JUNE 1, 1998

$20.00 - 1st car $15.00 - Other cars EACH $15.00 - No Car or Display

REGISTRATION POSTMARKED AFTER JUNE 1, 1998 or at the Convention

$30.00 - 1st car $20.00 - other cars EACH $20.00 - No Car or Display

YEAR	BODY STYLE	CATEGORY	CLASS
_____	_____	_____	_____
_____	_____	_____	_____
_____	_____	_____	_____

	PRIOR TO 6/01/98	AFTER 6/01/98	REMITTANCE
FIRST CAR	$_____($20)	$_____($30)	$_____
OTHERS EACH	$_____($15)	$_____($20)	$_____
NO CAR OR DISPLAY	$_____($15)	$_____($20)	$_____

AWARDS BANQUET

	PRIOR TO 6/01/98	AFTER 6/01/98	REMITTANCE
ADULTS	No. _____ @ $25 ea.	No. _____ @ $30 ea.	$_____
CHILD	No. _____ @ $15 ea.	No. _____ @ $15 ea.	$_____

SWAP SPACES

	PRIOR TO 6/01/98	AFTER 6/01/98	REMITTANCE
MEMBERS	$25 ea. _____ @ $25	$35 ea._____ @$35	$_____
COMMERCIAL	$30 ea. _____ @ $30	$40 ea._____ @$40	$_____
NON-MEMBERS	$35 ea. _____ @ $35	$45 ea._____ @$45	$_____

SOUVENIR T- SHIRTS

Qty S___M___L___XL___ Total Qty _____ @ $12 ea. Total $_____
Qty XXL___XXXL___ Total Qty_____ @ $14 ea. Total $_____

TOTAL REMITTANCE $_____

MAKE CHECKS PAYABLE TO: MILE HI CHAPTER FALCON CLUB OF AMERICA

MAIL TO: Fay di Zerega
5217 S. Geneva St
Englewood, CO 80111
(303) 770-4607 email: dizerega@aol.com

** Please include a photo of your car entry (if available) with your registration form. It will be returned at registration check-In. Please write you name on back of photo**

NOTE: The Mile-Hi Chapter has decided to have the voting on the classes take place between 2:00 and 5:00 p.m. on Friday, July 17. This is a departure from prior conventions when the voting took place on Saturday.

The National Falcon News

1965 Falcon Futura 4-door Sedan

Fred and Ginger Lancaster
Del Valley, Texas

April 1998

The Falcon News

THE FALCON CLUB OF AMERICA, INC. is a nonprofit organization dedicated to preserving the FALCON Automobile built by the Ford Motor Company from 1960 to 1970. The FCA was founded by Roy Sword in 1979 and is incorporated under Arkansas state law. Yearly dues to The Falcon Club of America are $25.00 ($30.00, payable in U.S. funds outside the United States) and are payable to: The Falcon Club of America, P.O. Box 113, Jacksonville, AR 72078-0113.

The Falcon News is published monthly with information from its members. **All copy and advertising for *The Falcon News* should be sent to the Editor, Wendelyn Crosby, 16318 Riggs Rd., Stilwell, KS 66085.** E-mail address: WCrosby63@aol.com. Please mark "FCA" on outside of envelope. Copy must be received by the first of the month preceding date of issue.

FALCON CLUB OF AMERICA OFFICERS — 1997-1998

President:	Steve Springer, 7812 N. Kansas Ave, Kansas City, MO 64119.	(816) 436-0493
Vice President:	Russell Hoeksema, 4519 56th St., W. Bradenton, FL 34210.	(941) 792-0282
Secretary:	Joe Tatti, 2140 Falmouth Terr. Burlington, Ont., Canada L7P 1X9	(905) 335-2834
Treasurer:	Roy Sword, 914 Foxwood Dr., Jacksonville, AR 72076	(501) 982-4240
Newsletter Editor:	Wendelyn Crosby, 16318 Riggs Rd., Stilwell, KS 66085	WCrosby63@aol.com
Club Store Manager:	Bonnie Stringer, 322 Jeff Davis, Waveland, MS 39576	(601) 467-4886
Partsmasters:	Charles Digiacomo, 1010 N. Hickory, Paris, AR 72855	(501) 963-3312
	Gerald Gasser, 73 Rose Lawn Ave., Fairport, NY 14450.	
Chapter Coordinator:	Jan Brown, 1044 Sable Blvd., Aurora, CO 80011-6814.	(303) 364-6127
Head Technical Advisor	Bob Passino, 5188 E. Henrietta Rd., Henrietta, NY 14467.	(716) 334-6779
Club Photographer:	Phil Warren, 602 N. Harrison, Springhill, KS 66083-9024.	(913) 592-3571
Research Director	Ray Roberts, 12272 W Atlantic Dr., Lakewood, CO 80299-4426.	
Internet Director	Brian Sullivan, 423 North Bent St., Powell, WY 82435.	(307)754-3399
Advertising Director:	Joe Stowe, 6834 Ranch Rd., Lakeland, FL 33809-2226	(941) 858-8264
Corresponding Sec.	Ruby Throgmorton, 2108 Memorial Dr., Jacksonville, AR 72076	(501) 982-9721
Web Site:	www.falconclub.com	

Board of Directors		(Number of years in term)
Chuck Beason	2855 Armadillo Trail, Titusville FL 32780-7513	(407) 383-1955 (5)
Althea Fleeman	5907 Kinsdale Dr., Nashville, TN 37211.	(615) 781-9374 (4)
Janice Brown	1044 Sable Blvd., Aurora, CO 80011-6814.	(303) 364-6127 (3)
Don Anderson	2082 Cooper Way, Jonesboro, GA 30236.	(770) 471-5026 (2)
Ken Kowalk	6138 Long Hwy., East Rapids, MI 48827.	(517) 663-4263 (1)

Cover Falcon: Fred & Ginger Lancaster

This 1965 4-door Futura is owned by Fred & Ginger Lancaster of Del Valley, Texas. When Fred first drove this 200 - 6 cylinder car home, it had 19,000 original miles. They drove the car until 1984 and then parked it. Fred says he thinks the reason it sat for so long was that he had so many cars. Now the Falcon has 38,000 miles on it. When Fred decided to move it, he put the key in, and not only did it start, it ran! It even got itself out of the mud it had been stuck in for 12 years! The car's original color was turquoise and it looks just right sitting in a field of Texas Bluebonnets.

Thanks to the Capital City Chapter Newsletter for the information on this car.

NOTE TO ALL MEMBERS: The club will send out notices to each member the month before membership expires. Be sure to send your renewal in early to retain your original membership number. If you do not renew your membership within 90 days after it has expired, your membership number will be placed in the inactive file and will no longer be used by the club.

Contents:

Cover Story & Officers 2
President's Message 3
Hoosier Chapter Car Showing 4
Tech Tips 6
Feature Falcon 8
Family Fotos 9
Classified Ads 10
Chapter News 12
Calendar of Events 12
Chapters by Region 13

Jacket: Falcon Club Store
Registration Pacific Regional
Registration National Meet in Breckenrui\idge
Registration Music City Regional

◆ President's Message ◆

Many people join one of our 45 chapters to develop a network of Falcon Lovers. They enjoy sharing stories, exchanging parts and ideas, building friendships and showing off their Falcons.

The best way is to get together — monthly seems to work best. These get-togethers can be held almost anywhere — local restaurants, cruises, car shows, a member's home or parks. They need to be planned at least two months in advance to allow members to clear their calendars. Some chapters have a set day each month (second Saturday, third Sunday, etc.) to make it easier to remember and plan. Use the Falcon News and your chapter newsletter to let others know about your meetings. When you pass out the '**Did You Know There Is A Falcon Club?**' cards write down the time and location of your meetings on the back.

Use *The Falcon News* to talk about what your chapter is doing. It only takes a minute to send a note to the Editor to let 3,000+ Falcon lovers know about the great things your chapter is doing. This can be a job for the Vice President of your chapter. Have a chapter member put out a monthly newsletter and make sure your regional director and the national Editor get a copy. It does not have to be anything fancy — a one pager with nothing but the officers' names and phone numbers, classified ads and a calendar of events for your area will do. It only costs 32 cents per month to keep a member in touch. **Be sure to send all material for inclusion to the national Newsletter Editor, not other club officers or the Club Store! See address on page 2.**
Design your chapter logo and have it approved by the FCA. Have patches made with the logo so you can use them on hats, shirts, jackets, etc. Show your chapter colors as you and the other members of your chapter attend various activities.

At your next meeting, get out the calendar and start mapping out some upcoming events in your area. See if your chapter can pick one activity per month that most of the members can attend. Plan tech meetings, picnics, meet at a local cruise. These events are always fun but they are even more fun with fellow Falcon Lovers.

The main thing that keeps chapters alive and growing is **ACTIVITY!**

Please contact your regional director with questions or suggestions. Use the Chapter News to let other FCA members know what you are doing to keep your chapter active. If you are interested in forming a chapter please contact Jan Brown your Chapter Coordinator.

The Maltese Falcon Chapter in New York has lost its leader, if you are interested in keeping this chapter alive please contact the Northeast Regional Director, Chet Wisneski.

Nashville, Here We Come! *Steve and Carol*

From the Editor — Wendy Crosby

Thanks to all who have written and e-mailed their support for my taking on the Editor position. I appreciate your patience and encouragement. Thanks to Bob Mannel for EPS conversion!

Please help your Falcon Club News!

◆ Send all advertising to the Editor. Ads are due the first of the month preceding the month in which they will appear (Due April 1 for publication in May issue.)

◆ If you have visited the Falcon Club website, you'll see a lot of terrific cars out there. While the website is a great draw for our Falcon Club of America, sometimes it's easy to forget that not everybody has access to the Internet. Those that don't will never see your car or read your story there.
Please remember to send photos, anecdotes and stories to the Newsletter as well as the Website. This publication is fueled by member submissions. At this writing, we have lots of classified ads, but we desperately need photos and stories for Feature Falcons, Family Fotos and Member's Rides. Photos of Chapter activities and PEOPLE are always welcome.

◆ Without your contributions, this publication would not be possible. Wouldn't you like to see your Falcon on the cover, or your Clubs activities featured inside? Send 'em along and we'll make sure ALL club members see what you have to offer. *Wendy*

On page 5 of the January Issue, the top car is incorrectly identified. It belongs to Bill Frederick, FCA #342. He lives in New Jersey. The car is also for sale, see the classifieds. We regret the error.
Steve Heath (Feb. cover) — Please send me your address. I have a letter from an admirer of your Falcon to forward to you.

FALCONS make SOLID SHOWING at major car show

Members of the Hoosier Chapter of the FCA attended the 500 World of Wheels Car Show held at the Indiana Convention Center in Indianapolis February 6-8.

This was the first time the club had entered a major car show of this type. The Chapter was allowed only 4 cars due to space limitations but they are already planning for next year's show where they hope to have more members' Falcons on display.

The club was very pleased to receive two Second Place awards and one Third place award. They also received an award for club participation.

Dan Brancolini, Ken Fandrich

Anthony Adamo, 2nd Place Modified Hardtop

Anthony Adamo, Bill Knabe, Sec/Treas., Ron Hurley, President & Dan Brancolini, Vice Pres.

Ron Hurley's 1963 HT

Merl Hawn & Family, 3rd Place Restored Convertible

Thanks to Bill Knabe for sending these photos of the Hoosier Chapter. Good Show!

The Convention Center Floor in Indianapolis at the 500 World of Wheels Car Show

Carl Gilbert's 1964 Sprint HT, 2nd Place Conservative HT

1963 FALCON FUTURA/SPRINT UPHOLSTERY TRIM PANELS (Door and Rear Quarters)

1964 & 1965 FALCON FUTURA/SPRINT UPHOLSTERY TRIM PANELS (Door and Rear Quarters)

Futura/Sprint Hardtops and Convertibles

- RED
- BLUE
- BLACK
- TURQUOISE
- LIGHT IVY GOLD

Complete with chrome ribbed mylar and bright molding.

$275.00 for 4 piece set
(Plus $16.00 for UPS shipping - 48 states)
Specify color and body style when ordering

Obsolete Ford
PARTS COMPANY
"The Old Reliable"
311 E. Washington Ave., Nashville, GA 31639 USA
Info: 912-686-2470/5101
Orders Only: 800-933-6731

FALCON COMET RANCHERO

ORIGINAL FALCON INTERIORS
60's through 70's

World's largest supplier of NOS and OEM upholstery sets and restoration parts.

6343 Seaview Ave NW
Seattle, WA 98107-5046

TOLL FREE — 1-888-609-2363
206-781-5230 Fax 206-781-5046

Tech Tips

HORSING AROUND WITH THE MUSTANG SIX

...Also Applicable to the Falcon Six...

Condensed from "Hot Rod" **Ak Miller**

In answer to requests for performance information about 6-cylinder engines, Performance Corner presents "Horsing Around With The Mustang Six,'" by Ak Miller, which appeared as a two-part article in the June-July 1967 issues of Hot Rod. Part I, which covered some very simple modifications and readily available parts from Ford and Lincoln-Mercury dealers, is presented in detail. Part II suggested some more ambitious modifications. Although any skilled mechanic could make them, they are only summarized here. Detailed information can be obtained from the July, 1967 issue of Hot Rod Magazine.

From out of the past comes the Bonneville runner himself, Ak Miller, patiently waiting for his crack at the salt in the number 13 streamlined Ford roadster.

PART I—WITH ECONOMY IN MIND, THIS FIRST "SHOT IN THE ARM" PRODUCED AN EXTRA 35 H.P.

Ford performance items for the current lineup of Ford V8 engines are easy to come by, but when we consider such equipment for the six-cylinder series, the cupboard is completely bare.

The reasons for this are quite simple. Six-cylinder engines are usually found in the lower-priced models, and their basic image is one of economy. Thus, the combination of low price and economy offers a great vehicle for the person interested in a fine, economical mode of transportation and one with an ample amount of horsepower.

However, there are scores of six-cylinder lovers who come up with the question, "How do I get just a little more power and what will it cost me?"

To these people we would like to offer our experiences with a 1967 200 cubic inch Mustang equipped with a standard three-speed transmission (2.99 in first and 1.75 in second) and a differential gearing of 3.20.

I personally felt this car would give us a good starting base since it offered an attractive body style, a very rugged three-speed all synchro gearbox, *and had been blessed with the most robust seven-main crankshaft six-cylinder engine ever conceived.*

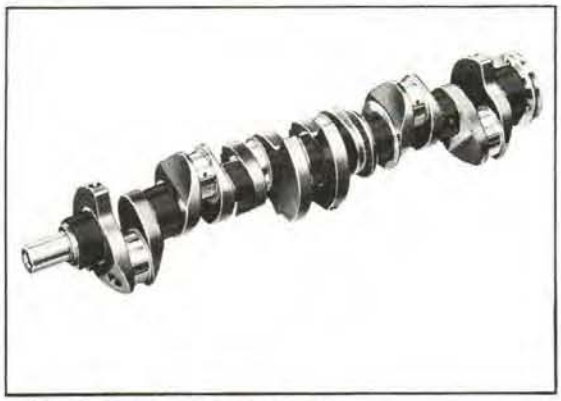

Figure 1—Seven Main Bearing Crankshaft

Measuring Horsepower

In the beginning I drove the car 2000 miles to stabilize the engine which, by the way, came with the full California Thermactor smog equipment. After bringing the engine right up to factory specifications, I took a run on my electric chassis dynamometer and recorded 65 horsepower at the rear wheels. Weighed against the 120 advertised horsepower, this sounds as if some guy at the factory forgot to give us a full load. But such was not the case, and I would like to digress here for a moment to explain a few pertinent facts about horsepower meansurement.

There are three basic means of ascertaining horsepower gains. One, of course, would be to remove the engine and run a full series of tests on a regular engine dynamometer stand. However, sometimes these figures cannot be correlated to the installed horsepower by the individual who reads the data, due to the fact that the installed horsepower is naturally somewhat less (because of exhaust inefficiencies, underhood breathing, and drag due to accessories).

Another method is the practical one of trial and error by taking the car to the drag strip, or by top speed runs, then evaluating the horsepower gains by comparing the performance gains.

The last choice is, of course, the chassis dynamometer. We felt this method was the best way to test the actual installed horsepower of the engine by measuring the output at the rear wheels. The unit we used was an electric dynamometer utilizing 18-inch rollers. Horsepower readings were obtained by a torque arm working through a potentiometer, the current being supplied by two synchronous generators driven by the rollers.

It is very difficult to come up with a 100 percent formula for converting chassis horsepower figures into actual crankshaft horsepower, so we will not concern ourselves with this matter here. We'll merely give the actual meter readings from the horsepower scale as well as the various rpm at which the readings were obtained. Thus, we will have a comparison of "before and after" readings as well as a general curve where one can readily see in what rpm range the changes were most effective.

Enriching Carburetor Air/Fuel Ratio

Our first run on the dyno gave us a rear wheel rating of 65 horsepower at 4000 rpm. The air-fuel ratio meter read 14:1. From past experience, this had proven to be quite lean on our particular meter, so we immediately decided the first step would be to enrich the mixture slightly for a little better horsepower reading. The standard jet was found to be 62F, so we decided to enlarge the jet size to 63½. Our second run on the dyno brought the air-fuel ratio to 13.4:1 and netted us a reading of 71 horsepower at the rear wheels (which proved to us we were headed in the right direction).

The next step was to ascertain if we had gone far enough, so we decided to drill the main jet out to a size .067. This produced a further increase to 75 horsepower at the rear wheels with an air-fuel ratio of 12.5:1. So as not to confuse the issue, I should state that my selection would be the .065 jet size for all-around usage where one would seek horsepower and good economy simultaneously.

Ignition Timing

We then took a check on the spark lead and its effect on the horsepower we were getting at the rear wheels. An initial lead of 10° offered us the best all-around ignition setting, even though factory specifications called for 5°.

Effects of Thermactor

By removing the air cleaner, we were able to come up with an additional one horsepower rating, which in this day and age is not bad. We were also curious about the Thermactor device, so we disconnected this unit and took another horsepower test. Lo and behold, we neither gained nor lost a significant amount of power. This should be a revelation to all of the people who have cars equipped with anti-smog devices—they do not seriously affect the horsepower output of the car. On the other hand, I must confess that such units do not help the idle nor the lowspeed running. However, where they are required by law, I would certainly recommend you leave them as is, and be certain they are operating properly.

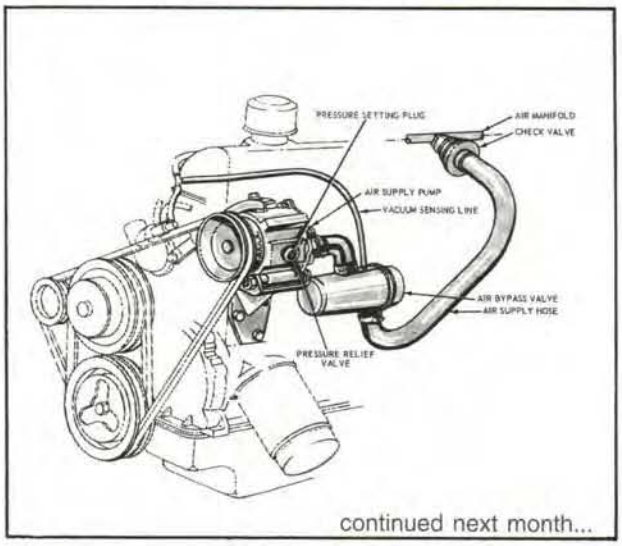

continued next month...

Figure 2—Thermactor Equipped 200 CID Six

Editor's Note: This 1968 article dealing with the Ford Six cylinder engine will run in three parts in the April, May and June editions of the Falcon News.

FEATURE Falcon

George H. Burnham Sr. and Kathleen Burnham are the proud owners of this original 1963 Falcon Squire wagon. White with red interior, it has 54,000 original miles on its 170 Special engine and it is a show driver. They have owned the Falcon since 1981 when it was purchased at a Falcon Club Chapter meeting! He bought the car for economy purposes, but he also realized the value as a collector car the same year.

When he bought the car, some of it was in parts due to an accident. It had been garaged for six years and and the replacement parts were new. A friend and former Falcon owner restored the wood grain on the sides

George says the most difficult part of getting it into the condition it is now was the wood grain and trim. The things he likes best are the economy and "there's lots of room in it!"

Falcon Family Fotos/Members' Rides

Al Potts, President Metro Detroit Chapter
Inksten, Michigan

Ken Mihok's recently completed 1965 Ranchero and his mom, Elizabeth
Bayville, New Jersey

Part of our Falcon Club "family" behind the scenes are the folks at Bill's Printing in Searcy, Arkansas. They do a great job for us and our hats are off to Jo, Andrea and Theresa (l-r) and the color pros in the pressroom.

River City Chapter Newsletter Editor, Geoff Belleau and family picking up their 1997 Christmas tree in his Falcon

Classified Ads

To Advertise: *FCA members* are entitled to two free ads per issue (**limit 50 words per ad**). Each ad must appear in a different section of the Classified Ads. The FCA will not be held responsible for errors (legitimate errors will be corrected in the next issue when requested). All ads for the classified section must appear with a members name and FCA # to be considered a free ad. All items advertised for sale must have a price for the ad to run. Ads to run in more than one issue must be resubmitted each month. Note: Ad guidelines

Non FCA member ads are $10.00 ea. Ads must follow the same guidelines as member ads.

Picture ads will be an additonal $20.00 per picture.

Commercial ads will be accepted on a space available basis. All copy for commercial ads must be camera ready or on disk in PC format. Questions about electronic submittal should be directed to the Editor at WCrosby63@aol.com.

***All ads* must be sent to the Editor, Wendelyn Crosby, 16318 Riggs Rd., Stilwell, KS 66085. Ads and inquiries sent to other Club officers may not appear in a timely fashion. If you have Internet access, please e-mail ads to WCrosby63@aol.com.** Payment must accompany the ad, with the check or money order payable to the Falcon Club of America.

Ads must be received by the ***first of the month for the following month's*** issue. Example: If your ad is received by the Editor between Feb. 2 and March 1, it will appear in the April issue. The FCA reserves the right to refuse advertising from any person or business.

Falcons for Sale

1960 2 door 302 C6, 9 in. rear end, $1000. Don Branson, Marthasville, MO (314) 228-4501

1961 2 door deluxe wagon 200, 6, 3 spd. std. $800., 1961 2 door deluxe wagon, auto, needs engine, $600., Don Branson, Marthasville, MO (314) 228-4501

1962 2 door wagon, model 59A. White/ red, white & black interior. Factory 4 speed, special Dso. Restored In/Out. All chrome, emblems new or replaced. Moving to Europe, would like to sell before move. $7500. OBO. Sean Keegan — 714-461-7566 or 310-371-7664

1962 Ranchero, new paint, white. Recently rebuilt motor, 200 CI, new tires, interior, shocks, chrome, etc. $3400. Make Offer. Dale — 702-883-7308 days. Email:cheney@reno.quik.com

1962 Sport Futura T Bird roofline, 170, auto, will part out, $400. Don Branson, Marthasville, MO (314) 228-4501

1963 Futura convertible, 200 6 cyl., 3 speed, excellent condition. Everything replaced or refurbished from tires to top rubber, including maroon paint. Class Winner at Orlando Nationals, 1997. Just drive and enjoy! Asking $6300. Dick Novak — 813-884-8219

1963 Sport Futura conv, 170, auto, $1,000. 1963 Sport Futura conv, 170, auto, $4,000. 1963 2 door wagon, does not run, $500. Don Branson, Marthasville, MO (314) 228-4501

1963 Falcon Futura, 2 dr, HT. Only 100 miles on rebuilt 170 CID engine and automatic trans. New paint & upholstery, New headliner & visors. New padded dash. Re-chromed bumpers. New AM/FM cassette/radio. Over $10,000 invested.. LOST MY GARAGE SPACE. $3000. OBO. Pictures on request. Will deliver for additional cost. Call Dan — 352-873-0324

1964 Sprint convertible, rebuilt 260 engine, top loader 4 speed trans., B.C. Dynasty Green paint, white top. New parts: carpet, console lid, dash plastic, rechromed F & R bumpers, valve covers, sir cleaner. Redone side moldings, rear panel and rocker moldings. New tires, brakes, dual exhaust. First at 94 Nationals and Keystone Regionals. $10,500. Bill Wisser, 12 Magna Drive, Copley, PA. 18037. 610-262-6555

1964 Falcon 2 door sedan. Wimbledon white exterior, Palomino interior, 6 cyl-144 cid, manual transmission. Original interior in excellent condition. Car has several trophies including 3rd at 1992 Falcon Nationals and 1997 Ford Show trophy. Engine detailed. Car is in excellent condition, drive anywhere. $4500. OBO. Phillip Nelson, Arlington Heights, IL 847-392-2822

1964 2 door SW, black, 289, 4 spped, original paint & interior, new carpet, nearly 100% rebuilt. Very low mileage on rebuild. $7500. OBO. Wm. A. Frederick Sr., 19 East Ave., Swedesboro, NJ 08085 — 609-467-4286

1964 Falcon convertible. Rust-free Carolina car. Rebuilt 200 CI, 6 cyl., auto. Many new or rebuilt parts. Black, red interior, white roof. Very good driver. $4500. Call 978-921-2881

1964 Falcon Futura Convertible. White/ Black top, 200 6 cyl., 3 speed. New top and tires, many other new parts. Very nice, no rust. Asking $5995. Howard Phillips, Green Bay, WI — 920-437-2546 evenings & weekends.

1964 Futura hdtp, (two), V8, auto, $800, $500. Don Branson, Marthasville, MO (314) 228-4501

1964 Sprint convertible. 260 V8. Off white with off-white top and red interior. Automatic, bucket seats, wire wheel covers and power steering. Mostly restored, needs some minor work. Will drive anywhere in continental US. $5900. Jay Erickson — 630-665-1190 or e-mail JSErickson@aol.com

1964 Sprint HT, 202, auto., $1000. Don Branson, Marthasville, MO (314) 228-4501

1965 Futura, 2 dr hdtp, 289, auto. $1,000.00. 1965 Sedan Delivery, 302, auto, solid body. $2,000.00. Don Branson, Marthasville, MO (314) 228-4501

1966 Falcon Futura 6 cyl., 2 door, std. 65,000 miles. Light blue, dark blue interior. No rust. $3500. Dannie Haigler — 704-888-4596

Parts for Sale

1962 4 door parts for sale - 4 nice doors, $25. ea., front and rear glass, $50. ea., automatic transmission & rear, $50., nice 55 (?) trim $75.. all, grill $50, 170 motor, $50 or $300 takes all. Ed Watt, Glassboro, NJ — 609-589-5209

Fuel Filter Canister — Exact Reproduction white w/ red

Back in Stock!

New! **Clutch Equalizer bars — '63, '64, '65**

Gas Tank sending units —60-64 car, 65 car,
60-63 Ranchero/SW/SD & 64-65 Ranchero/SW/SD

- **Brite red seat belts w/ chrome buckles**
- **Master Body Bolt kits — '63 - '65 - *COMING SOON!***
- **60 - '63 Dash pads — *Due in next 30 days!***
- **Transmission mount 60-65**
  — all w/C4 or 4 speed — *New design!*

MELVIN'S CLASSIC
Ford
FORD PARTS

770-981-2357 Fax: 770-981-6207

2526 Panola Rd., Lithonia, Georgia 30058

Tues. - Fri. — 9 am - 6 pm
Saturday — 9 am - 4 pm
Closed Sun. & Mon.

Please Patronize Our Advertisers. They support YOUR Falcon CLub!

JIM DOTTLING'S VINTAGE

FALCON, COMET & FAIRLANE CONNECTION

The Complete Parts Store

$3.00 Write For Our Fully Illustrated Catalog! $3.00

RUBBER WEATHER SEALS
CHROME EXTERIOR EMBLEMS & TRIM
INTERIOR TRIM PANELS & UPHOLSTERY
TRUNK MATS & SHOP MANUALS
INTERIOR CHROME & HARDWARE

NOW AVAILABLE !! ***LOW/LOW PRICE***
Center Drag Link – Only $79.95
6-Cyl 1960-65 – All Falcon/Comet

INSIDE REAR VIEW MIRROR – Non-Day/Night
C0DZ-17700-A
Fits ALL
1960-65 Falcons

NEW

Except Convertible & Hardtop **$35.95**

EXHAUST MANIFOLD
1960-62 Falcon/Comet/Fairlane 6 cyl.
Flat Flange Gasket or
donut flange gasket

Extra Heavy Duty (Won't Crack) **$74.95**

LOWER CONTROL ARM
1962-65
All Falcon & Comet
8 cyl & 6 cyl

$39.95

WINDOW REGULATOR D/SIDE

All 2-door
1960-65
Falcon/Comet except
Convertible & Hardtop **$65.00**

GEAR SHIFT LEVER AUTOMATIC

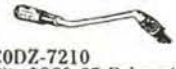

NEW

C0DZ-7210
Fits 1960-65 Falcon/Comet/Fairlane **$37.50**

Remember, Our Price Match Policy Means...We Cannot Be Undersold!
We Match Anyone Else On Price on Advertised Specials – Same Day Service On Most Items

ORDERS: 1-800-TTT-BIRD
INFORMATION: 1-602-997-9285/9780
FAX: 1-602-997-0624

VISA COD

HOURS: MON-FRI 7:30-5:00
728 East Dunlap
Phoenix, Arizona 85020

Calendar of Events:

May 22-23	Music City 2nd Regional Meet - Fiddler's Inn, Music Valley Drive, Nashville, TN Info — 931-455-6448
May 31	Mid America Chapter All Ford Show, Lawrence, Kansas. For info call Rick Dilks, 913-294-2599
June 5, 6, 7	Carlisle All Ford Show, Fairgrounds, Carlisle, PA. For Info — Bruce Wolfe, 717-469-7252
June 7	Motor City Show & Go Car Show, Ford World Headquarters, Dearborn, MI
June 19-20	8th Annual Pacific Regional Meet, Santa Rosa, CA. For info call Nancy Cozine 578-5710.
July 16-18	National Meet hosted by Mile Hi Chapter, Breckenridge, Colorado.
August 6 - 9	F-100 Country Classic, Fiddler's Inn, Music Valley Drive, Nashville, TN; info, call Dale — 615-883-1446
August 9	Mustang Memories Car Show, Wilson's Barn, Livonia, MI — Al Potts, 313-274-9179
August 21,22	5th Annual Northeast Regional Falcon Meet, Auburn, MA,call Ray Chevalier at (401)934-2105 e-mail <falcon22@ix.netcom.com
Sept. 13	Fun Ford Sunday, Milpitas, CA, Great Mall of the Bay Area. Info — Jeannine Nutter, 510-825-2906

Don't Miss the Mid America Chapter's All Ford Show — May 31, 1998, Lawrence, KS — BE THERE!

Chapter News

Metro Detroit Chapter membership had increased to 27 members as of the last meeting March 8 in Farmington, MI.

The **Blue Ridge Falcon Club** met Feb 15, 1998 and "welcomed some members of the Carolina Chapter who had driven some sharp cars to join us." The Chapter is planning several events including a blood drive, and a trip to Pigeon Forge in April or September. A decal design was chosen and proceeds from the sale of the decal will go to John De Lay Howe Home for Underprivileged Children.

The **Northeast Chapter** Newsletter features Keith & Shannan Porges 1963 Futura Hardtop with a full blown 302 V-8 and a matching trailer. Awarded Ladies Choice at 1997 Regional Meet.

Note the item in Calendar of Events, above, and circle your calendar for Fun Ford Sunday on September 13 in Milpitas, Ca. This is an inter-club event open to all Fords, Lincolns and Mercurys. The location is a former Ford plant, R code cars and trucks were manufactured there. Featured vehicles will be the F100 trucks, Edsels and Model A's. These vehicles were selected because 1998 is an anniversary year for them.

This year marks the 10th anniversary of the **Keystone Chapter** of the Falcon Club of America. To celebrate this milestone, a car meet is planned for Saturday, May 16 from 9-3 at Lake Lenape Park in Perkasie, PA, which also happens to be the location of the first chapter meeting in 1988. A swap meet, mini-cruise, lunch, games and entertainment are also planned. Take your Falcon out for a long ride and help them celebrate. Call Bill or Linda Wissick at 601-262-6555 for information and directions.

The **Music City Chapter** wants to personally welcome you to their 2nd Regional Meet over Memorial Day Weekend (see registration form this issue). Last year's show was a huge success with many folks already planning to return this year. NOTE: The Chapter is breaking with tradition this year. Bob Ferguson of the Music City Chapter writes "At every meet I have attended, Regional or National, there have been gripes about the length of the Banquet and Awards Ceremony. At this years meet, the Awards ceremony will begin promptly at 3:00 P.M. We will give away most of our prizes during the meet, only the 'drawing' for early registration and any major prizes we might get, will receive attention at the ceremony." This will leave some of the afternoon, the evening and night to spend as you like. For those who prefer an evening meal and get-together, a place is still provided on the registration form. If you don't like this idea, state so on your questionnaire. Bob says, "If there are enough gripes, we will go back to the old format."

Photos : Top — River City Chapter Members gather at the Towe Museum for the Club Christmas Party. Members' cars at the Towe, and ornaments for the tree made from every imaginable Falcon part! See sleigh above.

CHAPTERS BY REGIONCHAPTERS BY REGIONCHAPTERS BY REGIONCHAPTERS BY REGION

North Eastern Director
Ray Chevalier
(401)934-2105
falcon22@ix.netcom.com
73 Francis Rd.
Glocester, RI 02857,

The Buckeye Chapter
Jim Sibit (5647)
(216) 825-5708
941-W Hopocon Ave
Barberton OH 44203

The Erie Canal Chapter
John Yochum (3666)
(716) 681-4713
3609 Bowen Rd
Lancaster NY 14086

The Hoosier Chapter
Ron Hively (1886)
(317) 887-2632
619 N Chester Ave
Indianapolis IN 46201

The Keystone Chapter
Bruce Wolfe (0949)
(717) 469-7252
#1 Box 7940
Grantville PA 17028

The Maltese Falcon Chapter
(Contact Regional Director)
PO Box 172
Riverhead NY 11901

The Northeast Chapter
Karl Clark (1359)
(413) 584-1149
316 Brookside Cr
Northampton MA 01060

The Ontario Chapter
Dave Campbell (8064)
(519) 740-0538
RR 5
Cambridge Ontario
Canada N1R 5S5

The Yankee Chapter
Richard Brown (5213)
(603) 893-3113
PO Box 701
Windham NH 03087

South Eastern Director
Ken Earnhardt (1103)
(704) 786-2722
544 Old Farm Rd
Concord NC 28025

The Blue Ridge Chapter
Wayne Lynn (6027)
(864) 877-7676
2835 Locust Hill Rd
Taylors SC 29687

The Carolinas Falcon Chapter
James Baxter (4976)
(704) 735-5077
Rt 7 Box 470
Lincolnton NC 28092

The Eastern Virginia Falcon
Barry Gordon (5795)
(703) 832-5779
410 N Main St
Gordonsville VA 22942

The Mason Dixon Chapter
Carl Cline (1475)
(301) 733-6740
9704 Old National Pike
Hagerstown MD 21740

The Southeast Chapter
Ricky Kerbow (2239)
(404) 483-5249
166 Crowell Rd SE
Conyers GA 30208

The Star City Chapter
Marty Lovelace (4222)
(540) 387-0758
3798 Luther Dr
Salem VA 24153

The Suncoast Chapter
Chuck Beason (0774)
(407) 383-1955
2855 Armadillo Trail
Titusville FL 32780

North Central- Director
Ken Kenoyer (0883)
(515) 981-4800
Rt 1
Cumming IA 50061

The Cornhusker Chapter
James E Verhoeff (1401)
(402) 792-2072
Box 454
Hickman NE 68372

The Gateway Chapter
Bill Geisler (7195)
(314) 946-6047
76 Tom Sawyer Dr
St Charles MO 63303

The Great Lakes Chapter
Beverly Engle (6257)
(517) 849-7156
467 Oak St
Jonesville MI 49250

The Hawkeye Chapter
Dennis Olmstead (0937)
(515) 265-4566
4385 N E 32nd St
Des Moines IA 50317

The Metro Detroit Chapter
Al Potts (6359)
(313) 274-9179
255 Cherry Valley Dr #L17
Inkster MI 48141

The Mid-America Chapter
Rick Dilks (1106)
(913) 294-2599
307 N Castle
Paola KS 66071

The North Central Falconeers
Gary Fuerst (0900)
(414) 731-2708
1515 N. Kenilworth
Appleton WI 54911

The North Star Chapter
Troy Witt (1835)
(612) 898-3804
351 McAndrews Rd W
Burnsville MN 55337

The Wheat State Chapter
Brenda Chamberlain (4990)
(316) 283-5056
2511 East First
Newton KS 67114

South Central Director
Larry Fleeman (0195)
(615) 781-9374
5907 Kinsdale Dr
Nashville TN 37211

The Bon Temps Chapter
G Gary Loupe (1944)
31225 N Walker
Walker LA 70785-5103

The Dixeland Chapter
Flemming Horne (0406)
(901) 386-5894
7645 Memphis-Arlington Rd.
Memphis TN 38134

The Founder's Chapter
Roy Sword (0001)
(501) 982-4240
914 Foxwood Dr
Jacksonville AR 72076

The Frontier Chapter
E L Jacobs (1697)
PO Box 413
Paris AR 72855

The Gulf States Chapter
Bob Hubler (4200)
(601) 832-6722
101 Graham St
Gulfport MS 39503

The Music City Chapter
Althea Fleeman (0195)
(615) 781-9374
5907 Kinsdale Dr
Nashville TN 37211

South Western Director
Danny Rosewell (3366)
(817) 551-5773
420 Old Hwy 1187
Burleson TX 76028

The Alamo Chapter
George Myers (1793)
(210) 494-8205
1202 Elks Pass Circle
San Antonio TX 78232

The Capital City Chapter
Gary Brubaker (4099)
(512) 443-0442
7301 Loganberry
Austin TX 78745

The Heart of Texas Chapter
Danny Rosewell (3366)
(817) 551-5773
420 Old Hwy 1187
Burleson TX 76028

The Lone Star Chapter
Wally Smith (5429)
(972) 442-6793
6994 Dovecreek
Wylie TX 75098

The Northeast Texas Chapter
David Gunnells (0278)
(903) 759-6850
Rt 2 Box 149B
Goldwater TX 75647

The Sooner State Chapter
Lloyd Lang (3650)
902 N Hughes St
Morris OK 74445

The Space City Chapter
Richard Harrelson (5502)
(713) 453-3247
14209 Bandera
Houston TX 77015

Mountain - Director
Ron Brown (2254)
(303) 364-6127
1044 Sable Blvd
Aurora CO 80011

The Arizona Chapter
Bill Branch (1127)
(602) 971-8803
11634 N 29th Pl
Phoenix AZ 85028

The Mile Hi Chapter
Ron Brown (2254)
(303) 364-6127
1044 Sable Blvd
Aurora CO 80011

Pacfic - Director
Mark Milton (4226)
(916) 661-3606
610 Kentucky Ave
Woodland CA 95695

The Central California Chapter
Nick King (5506)
(805) 588-9468
204 Ritter Ct
Bakersfield CA 93312

The Greater Bay Area Chapter
Bob Snider (7364)
(510) 278-0519
63 Via Pacheco
San Lorenzo CA 94580

The Northwest Falcons
Jim Frey (3292)
(425) 226-2225
2425 Monterey Ave NE
Renton WA 98056

The Rainier Chapter
John Kosche (7624)
(253) 922-6804
5615 43rd Ave E
Tacoma WA 98443

The River City Chapter
Mike Cavanaugh (5094)
(916) 481-1206
1454 Meredith Way
Carmichael CA 95608

The Sonoma County Falcons
Ray Johnson (6079)
(707) 546-8082
2407 Horseshoe Dr
Santa Rosa CA 95405

Parts for Sale

Complete 260 V8, $350. Warner T10 4 speed with 5 bvolt pattern for 1964 & prior, $350. Chrome bed rails for 1964-65 Ranchero, $125. 260 V8 block, $75. Crankshaft for 260 V8, $50. Larry Johnson, Byron, WI — 920-923-0508

NOS C3DZ:16098A name plate, $15. pr. 4 NOS '65 Futura hubcaps, $200. '65 Horn button (not Futura), $15. '65 6 cyl. rear, $40. '64 HT doors, $35. '64 Fenders, $50. 5 bolt bell housing, $50. Conv. sun visors, $35. pr. HT sun visors, $25. pr. '65 170-200 engines, $$85. ea. '64 red console lid, $25. '65 sedan seats F&R, $20., green, '65 seat belt, green & blue, $20. ea. Bill Wisser, 12 Magna Drive, Gopley, PA. 18037. 610-262-6555

'60's Falcons and other Fords into '80's being parted out. All parts will be good to used mint. Example: '60 & '61 Falcon grilles, $120. Can be polished for extra fee. Grilles are perfectly straight. '60 Falcon SW glass& roof rack. Rack is fair to good condition. Make offer. Also non-Ford cars being parted out, '60's to '70's. Please pass word along. This is a new resource that has never been advantaged. Call or write Franklin Parnell, 2810 Lynn St., Apt. 18, Union City, TN 38261 — 901-884-2766

1968 302 4bl smog heads, $250; 289 HI PO Crane Fire Ball heads with roller rockers, like NOS, $1200.; 289 4 bl intake cast #C50E-9425-C, date 5A25 show ready, $150. Much more — 314-351-1789 between 7-10 p.m. Keith Litteken, 4085 Bowen St., St. Louis, MO 63116

20 yr. collection. Have most parts for '60 thru '65. Some '66 thru 70 1/2. Doors , $50., hoods, $50., deck lids, $35., tail light buckets, $15., chrome moldings $10., $20. Call for additional information and availability. Don Branson, 4097 Hwy T,Marthasville, MO — 314-228-4501

Fordomatic 2-speed rebuilding kits with gaskets, o'rings, lip seals, clutches (bronze frictions & steels), sealing rings, front and rear seal, $100. Specify engine size and year. Bands $45 each, adjustable modulator $12. Bushings, washers, pumps and miscellaneous hard parts available. Kits, bands and parts available for small, medium case, C-4 and C-6. David Edwards, PO Box 245-FC, Needham Hgts., MA 02194-0245 (781) 449-2065 Evenings

Grilles, '61, $35. '62, $100., '63, $60., '64, $40. to $100., '65., $40. - $100., '66, $40., '68-'70, $40., '62-'63 Hood scoops chromed with exchange, $60. Sedan bottom of roof pillar excahange, $30. ea. One conv. inner windshield post rechromed, $60. with core. Pair HT inner windshield, $50. ea w/ core '64 HT/conv. outside door handles rechromed, $40. pr w/ core. '6 3 to '65 HT/conv. windshield to mirror bracket, $7. w/ core. '62-'63 fender ornament chromed, $50. pr. w/ core. '64 Foxcraft fender skirts stainless steel NOS, $150. '65 Futura Stainless trim with inserts, full set $150. Shipping extra. Call Dan or Archie — 813-797-6817

T-10 4 speed w/ correct shifter, $350., '64 T-Bird bucket seats conv., no runners, $100., '66 Sports coupe bucket seats $150., '63-'65 rocker arm mouldings, $50. pr., '65 V-8 center link w/ control module, idler and tie rods, $160., '65 manual centerlink w/ idler and tie rods, $150., V-8 Pittman arms one inch and two inch and an eighth, $100. ea., '63,'64,'65 bumper cores, $50. ea., '66 rear bumper like new, $150., '60-'61 front$100. and $75.000, V-8 frame pieces, $50. pr., A/C for '64-'65 6 cyl. complete brackets and pulleys, $150., other A/C brackets and pulleys and more. Shipping extra. Call Archie and Dan — 813-797-6817

Falcons Wanted

1960-1963 Falcon sedan, automatic, good #3 - show #1 condition. Please mail photos and info to Zona Laurent, 6006 E. Rockcliff Lane, Alexandria, VA 22315.

1960-1963 Falcon station wagon. Zona Laurent, 6006 E. Rockcliff Lane, Alexandria, VA 22315.

Parts Wanted

C3DZ-4462-A, pinion crush sleeve, 6 cylinder, C2DZ-4851-A, pinion yoke, 6 cylinder, C7OZ-7528-E, clutch equalizer bar, 68, 6 cylinder, C3DZ-3356-C idler arm bushing, 64, V8, manual steering, C3UZ-2760-A, Emergency Brake Handle, Econoline, C5UZ-2A635-B, emergency brake cable left, Econoline, C3DZ-3020-B, upper A frame bumpers, 64 V8, 2 pair of original seat belts for Falcon Club Wagon and Econoline. Richard Alyea, 1817 N. Timber Ave., Bethany, OK (405) 789-6592

1963 3 speed stick transmission. Also, good chrome back bumper. Roy lange, 515 Bench St., Chatfield, MN 55923. 507-867-3590

Day/night rear view mirror and red spare tire cover (no cracks) for '65 wagon. Marin Ennis, West Lawn, PA — 610-678-2997

1960 Falcon Wagon parts. Must be excellent condition, either used or NOS. Gas cap, CODD-9030-J; tailgate emblem, CODB-5943500-A; rear bumper, right front fender, mouldings around tailgate glass and left rear side glass. Shop manuals and parts book. 314-351-1789 between 7-10 p.m Keith Litteken, 4085 Bowen St., St. Louis, MO 63116

Miscellaneous Wanted

1964 Falcon Futura or Sprint. 2 dr. hardtop. Model car. Please contact Pete Pressley, Canton, NC. Call collect — 704-648-6888

Miscellaneous For Sale

Gold plated keys and NOS keys for all Falcons and all Ford models. Many of those hard to find keys and lock cylinders. Keys cut by code, please inquire with year and model. Jesser's Classic Keys, 26 West Street Dept FCA, Akron OH, 44303-2344, (330) 376-8181 and 24 hr Fax (330) 384-9129. Visa, M/C, AMEX, Disc.

Various old car magazines with Ford highlights, 1962-1978. Car and Driver, Motor Trend, etc. Please inquire for year and title request. Brandon Lewis, Seaford, DE (302) 629-5110

Tune In
to:
www.falconclub.com

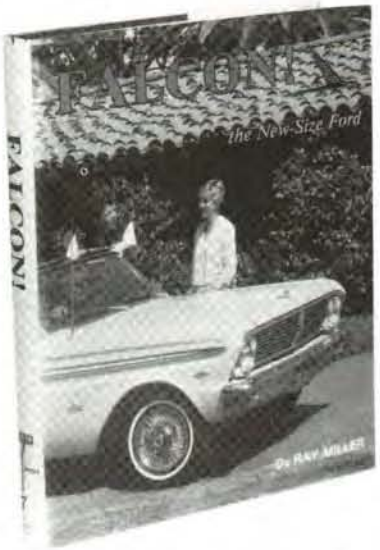

Now Back in Stock!

FALCON!

... the new-size Ford

#7 in the Ford Road Series

ISBN 0-913056-11-1 320pp illustrated

$44.95

Usual dealer's discounts apply!

The Evergreen Press, Palm Desert, CA
(760) 568-1880 or 760-773-5255(FAX)

Also Available through the Falcon Club Store!

Please Patronize Our Advertisers. They support YOUR Falcon CLub!

Check out our www.autokrafters.com Website

Falcon Weatherstrip

SEND $3.00 for the latest Catalog

Door Weatherstrip (A)

- '60-'65 2 door sedan, station wagon & Ranchero
  C0DZ-6220530-1 $69.95 pr
- '63-'65 Hardtop & convertible
  C3DZ-7620530-1 $79.95 pr
- '60-'65 4 door sedan
  C0DZ-7320530 $159.95 kit
- '66-'67 Ranchero
  C6DZ-6620530-1 $69.95 pr
- '66-'70 2 door sedan
  C6OZ-6220530-1 $79.95 pr

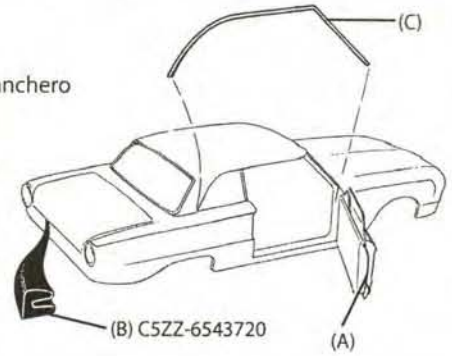

Trunk Weatherstrip (B)

- '60-'63 **C5ZZ-6543720 $9.95 ea**
- '64-'70 **C3AZ-6243720S $15.95 ea**
- '70 1/2 **D0AZ-6543720 $19.95 ea**

Roof Side Rail Weatherstrip (C)

- '63-'65
  C3DZ-6351222-3 $224.95 pr

Beltline Weatherstrip Kits

These 8 piece kits include inner & outer beltline for both doors & quarter windows.

- '60-'63 2 door sedan (8 pc)
  F113 $49.95 ea
- '63-'65 Convertible
  F116 $49.95 ea
- '63-'65 2 door hardtop
  F115 $49.95 ea
- '64-'65 2 door sedan
  F113A $49.95 ea
- '60-'65 4 door sedan
  F126 $49.95 ea
- '66-'70 4 door sedan
  F114 $59.95 ea
- '66-'70 2 door sedan
  FA105 $59.95 ea
- '70 1/2 2 door sedan
  D0OZ-21452-62K $89.95 ea

ORDER TOLL FREE 1-800-228-7346

P.O. BOX8FN • BOADWAY, VA 22815
(540) 896-5910 • www.autokrafters.com

CELEBRATING OUR 20th ANNIVERSARY 1978-1998

AUTO KRAFTERS

Prices do not include shipping and handling. Prices subject to change without notice. We accept Visa / Master Card / Discover. Fax: 540-896-6412

Falcon MYSTERY

These are great photos of great cars that arrived with no information on the back! We always like to identify the owners of the cars, so be sure to write your name and where you live on the back. While you're at it, send along a little story about your Falcon. — Thanks to whoever sent the photos (they finally made it to the Editor...) and to the unidentified car owners!

Dearborn Classics

FALCON PARTS

Quality you expect at competitive prices!

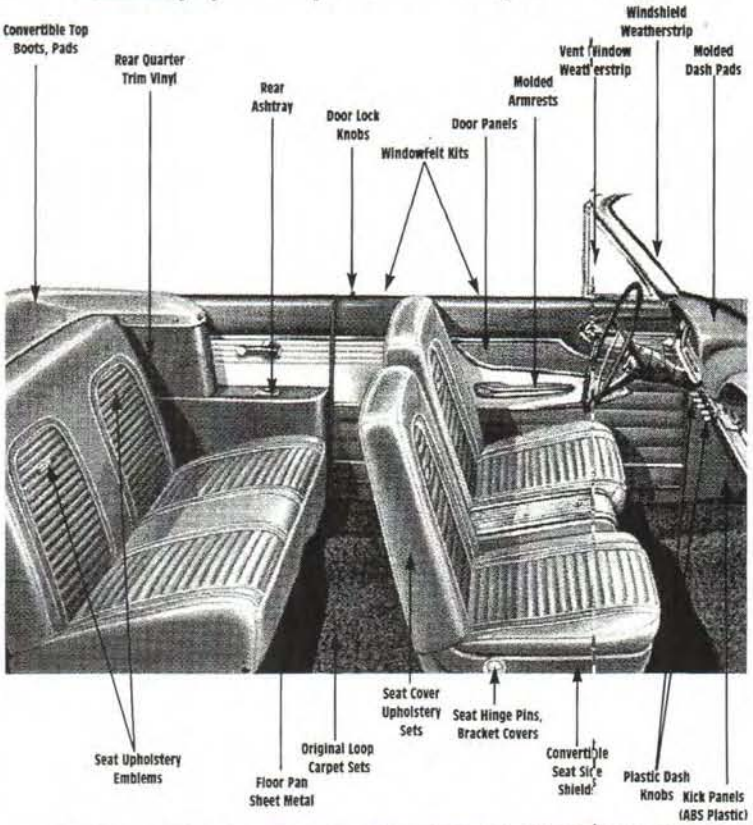

GET IT ALL IN ONE CALL, ORDER THESE ITEMS TOLL FREE1-800-252-7427

VISIT OUR NEW WEB SITE WWW.DEARBORNCLASSICS.COM

ORDER TOLL FREE 1-800-252-7427

CONVERTIBLE TOP, BOOT, PADS
Available in Black, Red, Blue, Aqua, Ivy Gold and Palomino

63/65 Conv. Top Boot	pr $69.95
63/65 Conv. Top Pads	pr $34.95
63/65 Conv. Well Liner	$69.95
63/65 Conv. Top -Plastic Window	$179.95

REAR QUARTER TRIM UPHOLSTERY
Available in Black, Red, Blue, Aqua, Ivy Gold and Palomino

63/65 Rear Quarter Trim Upholstery	pr $59.95

REAR ASH TRAY RECEPTACLE AND COVER

63/65 Conv. Rear Ash Tray Receptacle	ea $12.95
63/65 Conv. Rear Ash Tray Slide Cover	ea $16.95

ORIGINAL STYLE DOOR LOCK KNOBS

62/64 Door Lock Knobs-Specify Color	ea $2.95
65 Door Lock Knobs-Chrome	ea $1.95

WINDOWFELT KITS (BELTLINE)
OEM style replacement windowfelt kits.

63/65 Conv. Windowfelt Kit (8 Piece)	set 49.95
63/65 Hdtp. Windowfelt Kit (8 Piece)	set 49.95
60/65 2 Dr. Sedan Windowfelt Kit (8 Piece)	set 49.95
60/65 Ranchero Windowfelt Kit (4 Piece)	set 49.95

ORIGINAL STYLE DOOR PANELS
We now have original 1965 two tone blue and aqua, exclusively from Dearborn!
Available in Black, Red, Blue, Aqua, Palomino, and Ivy Gold

1963/1965 Front Door Panels	pr 249.95
1963/1965 Rear Door Panels	pr 29.95
1965 Two Tone Blue or Two Tone Aqua add $40.00	

MOLDED ARMREST PADS
Available in original red and black.

1960/1964 Armrest (Standard Models)	29.95
1963/1964 Armrest (Deluxe Models)	39.95
1965 Armrest (All Models)	29.95

VENT WINDOW WEATHERSTRIP
Quality manufactured in the U.S.A!

63/65 Vent Window Seals (Hdtp., Conv.)	pr 69.95
63/65 Vent Window Seals (Ranchero, Sedans,4 Dr.)	pr 69.95

WINDSHIELD WEATHERSTRIP

60/65 Windshield Seal (All except Conv., Hdtp.)	49.95
63/65 Windshield Seal (Conv., Hardtop)	49.95

MOLDED DASH PADS

1960/1963 Dash Pads	COMING SOON
1964/1965 Dash Pads (Red, Blue)	179.95
1964/1965 Dash Pads (Black)	149.95

SEAT UPHOLSTERY SETS
Correct original patterns and colors for hardtops, Rancheros and convertibles.
Available colors: Black, Red, Blue, Aqua, Palomino, and Ivy Gold.

1963 Seat Cover Upholstery Set (Front and Rear)	set 439.95
1964 Seat Cover Upholstery Set (Front and Rear)	set 439.95
1965 Seat Cover Upholstery Set (Front and Rear)	set 309.95

* Add $40 for original two tone blue and aqua

SEAT UPHOLSTERY EMBLEMS

1961/1962 Seat Upholstery Emblem	ea 12.95
1963 Seat Upholstery Emblem	ea 24.95
1964/1965 Seat Upholstery Emblem	ea 24.95

SEAT HINGE PINS AND SEAT BRACKET COVERS, AND BUCKET SEAT SHIELDS

1960/1965 Seat Hinge Covers (All Models,Bench)	pr 24.95
1963/1965 Seat Hinge Covers (Hdtp.,Buckets)	pr 49.95
1963/1965 Seat Hinge Covers (Conv.,Bench)	pr 24.95
1966/1970 Seat Hinge Covers (Bench)	pr 24.95
1961/1962 Bucket Seat Side Shields	pr 59.95
1963/1965 Bucket Seat Side Shield (Convertible)	pr 59.95

FLOOR PAN SHEET METAL
American made floor sections for Rancheros and Falcons. 63/65 convertibles require some modification.

1960/1965 Floor Pan Front Section (RH or LH)	ea 49.95
1960/1965 Floor Pan Rear Section (RH or LH)	ea 69.95
1960/1965 Toe Board Section (RH or LH)	ea 29.95
1960/1965 Full Floor Pan (RH or LH)	ea 129.95

MOLDED CARPETS
Molded for all models except 63/65 convertible which is originally cut and sewn. All original colors.

1960/1965 Molded Carpet Set (All models)	119.95

INTERIOR DASH KNOBS

1960/1963 Ranchero/Falcon Interior Dash Knobs	ea 4.95

KICK PANELS
Durable ABS plastic with original style grain texture
Black only, dye to match

1960/1965 Kick Panels (All models exc. Convertible)	pr 49.95
1963/1965 Falcon Kick Panels (Convertible)	pr 49.95
1966/1970 Ranchero/Falcon Kick Panels	pr 49.95

CALL FOR OTHER ITEMS NOT LISTED, HUGE INVENTORY!

FREE 130 PLUS PAGE ILLUSTRATED CATALOG
Phone (800) 252-7427, 24 Hour Fax (714) 372-3801
Dearborn Classics P.O. Box 1248, Dept. FCA, Sunset Beach, CA 90742

The Sonoma County Falcons for Fun Chapter
presents the Eighth Annual Pacific Regional Meet — June 19th and 20th 1998
Santa Rosa, California

Accommodations: The show will be held at the Coddingtown Mall (located at Highway 101 & Steele Lane exit). Hotel accommodations are available at the Los Robles Lodge (1985 Cleveland Ave., adjacent to the Coddingtown Mall. Call 707/545-6330 to make your hotel reservations. A block of rooms has been reserved until may 17, 1998, for $65.00 per night plus tax.

Friday, June 19, 1998 check-in and early registration @ los robles lodge—12:00 pm to 6:00 pm; cruise nite to local restaurant—Los Robles Lodge @ 6:30 pm

Saturday, June 20, 1998 Swap Meet@Coddingtown Mall parking lot—6:00 am; show & shine @ Coddingtown Mall parking lot—10:00 am to 4:00 pm; participants choice judging—10:00 am to 2:00 pm; raffles—all day; banquet dinner @ Los Robles Lodge—6:00 pm

Sunday, June 21, 1998——*NO HOST FAREWELL BREAKFAST*: Cut and save this section for your records.

REGISTRATION FORM

Name_____ Spouse/Guests_____

Address_____ CITY_____ STATE_____ ZIP_____ Phone_____

NOTE: All final classes and awards will be determined based on early registrations and information given below. Please register your car(s) in one of the classes listed below. Prior to May 20th, the registration fee is $15.00 for the first car, and $10.00 per additional car. After May 20th, the registration fee is $25.00 for the first car, and $20.00 per additional car. The first 100 registered cars receive Dash Plaques & Hospitality Bags.

FALCON(S) REGISTRATION YEAR		BODY STYLE	CLASS
_____	_____	_____	($15.00 or $25.00) $_____
_____	_____	_____	($10.00 or $20.00) $_____
_____	_____	_____	($10.00 or $20.00) $_____

Total Car Registration Fees.....$_____

SWAP SPACES REGISTRATION Spaces Requested _____ X $20.00 per space = ...
$_____ Falcon for Sale _____ X $10.00 per space = ... $_____

BANQUET REGISTRATION

Choice of Meals	How Many?		Cost per Meal
London Broil	_____	$16.00	$_____
Grilled Chicken	_____	16.00	_____
Vegetarian	_____	16.00	_____
Child-Cheeseburger	_____	7.00	_____
Banquet Total.....$	_____		

TEE-SHIRTS	Size	How Many?	CostTotals
		Totals	
M _____	$ 10.0$	_____	
L_____	10.00	_____	
XL_____	10.00	_____	
XXL_____	12.00	_____	
Tee-ShirtsTotal.....$_____			

TOTAL FEES (include Car Registration, Swap Spaces, Banquet, and Tee-Shirts).....$_____

SEND YOUR REGISTRATION FORM AND CHECK (PAYABLE TO SCFF) TO NANCY COZINE, SCFF TREASURER, 2172 PINER ROAD, SANTA ROSA, CA 95403. CALL NANCY COZINE (TREASURER) 707/578-5710, OR RAY JOHNSON (PRESIDENT) 707/545-8082 FOR ADDITIONAL INFORMATION, OR VISIT www.jps.net/toolfool/scff

CAR CLASSES—(1) 1960-1970 SEDANS (2) 1960-1970 UTILITIES—STATION WAGONS, VANS, AND DELIVERIES (3) 1963 HARDTOPS (4) 1964 & 1965 HARDTOPS (5) 1963 CONVERTIBLES (6) 1964 CONVERTIBLES (7) 1965 CONVERTIBLES (8) 1960-1970 DAILY DRIVERS—ALL FALCON TYPES (9) 1960-1963 RANCHEROS (10) 1964-1966 RANCHEROS (11) 1960-1970 MODIFIED FALCONS—ALL VEHICLE MODELS (12) 1960-1970 CLUNKER CLASS (13) 1960-1970 DISPLAY CLASS OF FALCONS & COMETS (NOT JUDGED) NO CHARGE.

AWARDS—1ST, 2ND, AND 3RD PLACE AWARDS IN EACH CLASS EXCEPT DISPLAY. IN ADDITION, AWARDS WILL BE GIVEN TO THE BEST OF SHOW, LONGEST DISTANCE DRIVEN, AND OLDEST FALCON.

Liability release must be signed to complete car show or swap meet application: It is understood Sonoma County Falcons for Fun Chapter of the Falcon Club of America assumes no responsibility, nor will be responsible for any damage or loss of car or property during this event.

_____ _____ Signature

Date

Falcon Club Store Falcon Club Store Falcon Club Store Falcon Club Store

Falcon Club of America Goodies - All with FCA Logo!!!

- **Falcon Club Jacket** - with Embroidered FCA Logo. Black, Silver, White, Red, Royal. S-3XL $30.00
- **Golf Shirt** - Men's Embroidered FCA Logo. Red, Royal, White, Maroon, Green more....
  S - XL.... $14.00 2XL - 3XL....$15.00
- **White T-shirt with Large FCA Logo** S - XL.... $7.00 2XL -3XL....$8.00
- **Sweatshirts or pants** - red, white, royal, black, more S - XL....$11.00ea 2XL-3XL....$13.00ea
- **Tshirts** - Red, Royal, Black, more - small logo - S - XL...$7.00 2XL - 3XL....$8.00
- **Tshirts** - Grey w/small logo on front large logo on back S - XL.....$8.00
- **Infant Crawlers** - White, Grey, Denim, Hot pink, 6 mo to 24 mo....$6.00
- **National Club Patch** 3".....$3.00 National Club Patch 9".....$6.00
- **FCA hat pin/tie tack**....$3.00 Window Decal.....$1.25 Memo Pad....$.50
- **FCA Belt Buckle** - oval 2' x 3"...$15.00 Sipper cup.....$2.50 Umbrella.....$10.00
- **FCA Western Belt** 38-42...$20 44-48....$21.00 50-54....$22.00
- **Ball Caps** - Red, Royal, Black, Grey, more Summer mesh, Twill w?FCA patch.....$7.50
- **Convention pins** 1991 - 1997 (no '93 or '95 available) $3.00
- **Videos of National Conventions** 1991 - 1995 State year....$13.00 1996 National Convention...$20
- **White or Grey T-shirt** with color transfer your choice; 60 - 63's, 64 - 65's, 60-63 Ranchero, 64-65 Ranchero, 66 Ranchero
  S -XL....$9.00 2XL - 3XL....$10.00
- **"Your Car" sweatshirt** or t-shirt call for more info ..... Sweat $16.00 Tshirt.....$10.00
- **The Falcon News Technical Tips**, 10 years of Tech tips.....$10.00
- **Bumper stickers** ...$1.00ea "I'd rather be driving my Falcon" OR "My other car is a Falcon"
- **Fender Cover** w/Falcon imprint.....$22.00 Repro Shop Manual 60 - 62.....$30.00
- **Falcon Key Fob** - Leather..$3.00 Resin-art key fob.....$4.00 Metal key fob...$2.00
  Key fobs have Falcon Bar or Ranchero Script
- **Earrings Falcon Bar Wire**.....$6.00 Earrings Ford crest, wire or post $6.00
- **Ball Caps** - red, white, royal, black, more with choice of patch below.....$7.50
- **Patches** - Station Wagon, Sprint, Ranchero, Convertible, Sedan Delivery,.....$2.50
- **Patch** - Falcon Script asst colors.....$3.00
- **Pins** - Falcon bar, Bullhead, Ford oval w/yr, 289, This is Ford Country, Real Men/women drive Fords, This is you brain...., many more $3.00ea
- **Watches** - Man's or Lady's Limited Edition, White face with FCA logo.....$35.00ea

PLEASE STATE SIZE AND 1ST & 2ND CHOICE OF COLOR

POSTAGE: Letter size - $.50, Packages $1 to $20 = $3.50, $21 - $40 = $4.50, $41 up = $5.50 Foreign and Canadian $6.00

Send Check or Money order in USD to Falcon Club Store, 322 Jeff Davis Ave, Waveland MS 39576

OR Phone (ORDERS ONLY) 1-800-467-4886 code FCA (322) LEAVE A MESSAGE

We accept VISA, MASTERCARD, DISCOVER, AMERICAN EXPRESS for Club Store Purchases!

FALCON CLUB OF AMERICA
P.O. Box 113
Jacksonville, AR 72078-0113

FIRST CLASS MAIL
U.S. POSTAGE
PAID
McRae, AR 72102
PERMIT NO.7

FIRST CLASS MAIL

The Newsletter dedicated to Falcon lovers...everywhere!

Renewal Date
↓

07007 Nov
Tirado, Waldemar Sr
3636 Late Morning Cr
Kissimmee FL 34744-0000